ARC TRAINER 770AT TOTAL BODY

770AT-E3-01

Parts Manual

4/2/2018 8:14:02 AM



LifeFitness
WHAT WE LIVE FOR

Table of Contents

Arc - SnapFitness....3
625AT/770AT Cruiser Handle Kit....4
750A Linkage Assembly....6
750 Arc - You Fit....7
770AT Arm Linkage Assembly....8
770AT E3 View - Console Tray Assembly....10
770AT E3 View - Drive Frame Assembly....11
770AT E3 View - Foot Plate Assembly....13
770AT E3 View - Handle Assembly....14
770AT E3 View - Lower Electronics....16
770AT E3 View - Rear Cover Assembly....17
770AT E3 View - Shroud Assembly....18
770AT, 771AT - Hardware Manual and Power Cords....19
770AT/771AT E3 View - Console Assembly (Before J1102)....21
770AT/771AT E3 View - Console Cables (Before J1102)....23
770 Arc Drive Frame Detail....24

Arc - SnapFitness

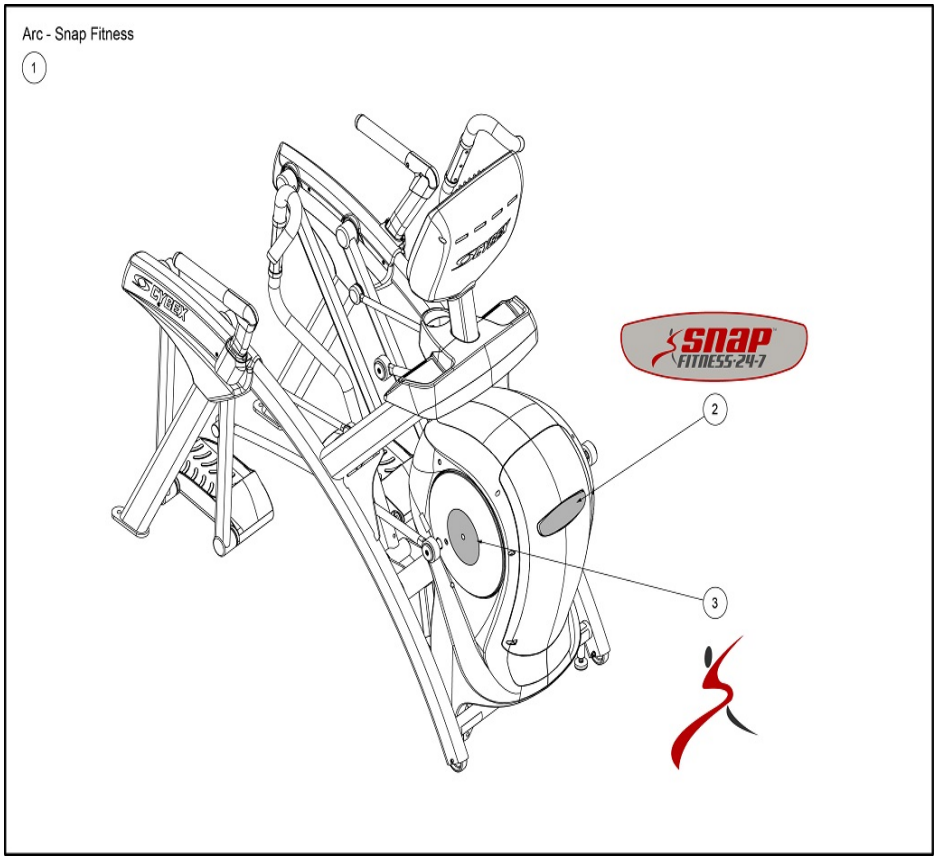

Ref #	Part Number	Qty	Description
1	625A-060S	1	BRANDING PACKAGE S, SNAP FITNESS
2	750A-410	1	Decal Logo Snap Fitness
3	630A-335	2	DECAL SNAP FITNESS RUNNING MAN 10.00

625AT/770AT Cruiser Handle Kit

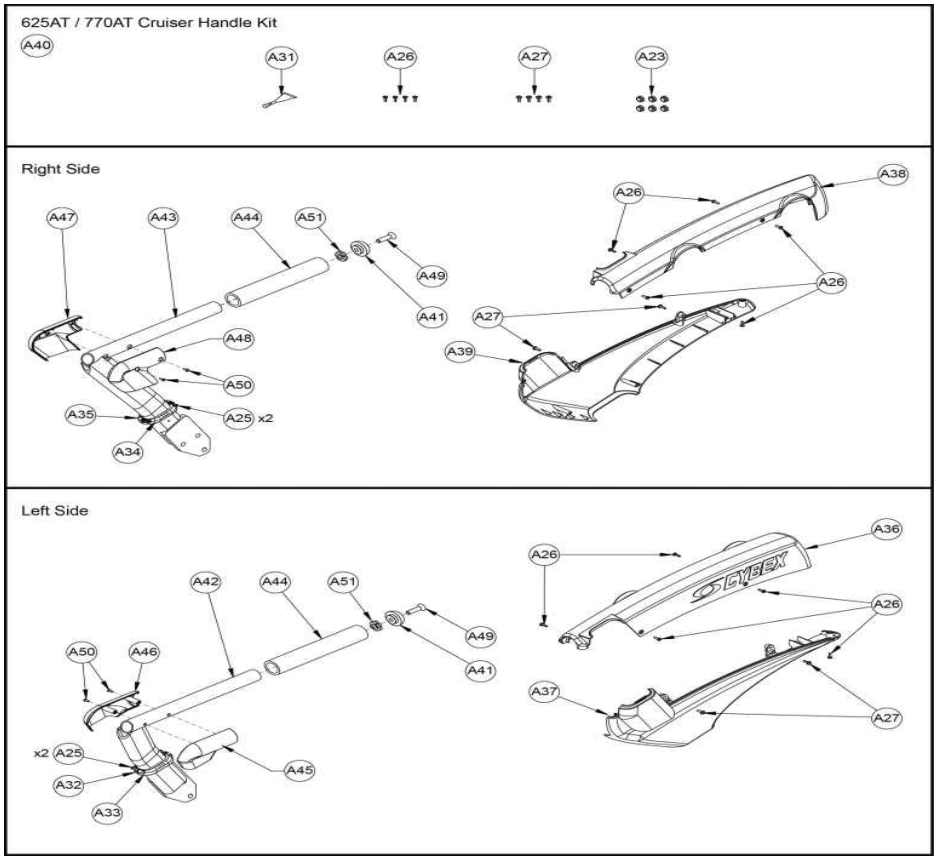

Ref #	Part Number	Qty	Description
A23	HN704901	6	LOCKNUT .375-16 NYLON
A25	HT532512	4	PN HD PHIL SC #6 X .50 PLASTITE
A26	HT552512	14	TAP SC NO. 8-16 X .50 PLASTITE PAN HEAD PHILLIPS BLACK
A27	HT572515	8	SCREW, PAN HEAD PHILIPS 10-24 X .75 TYPE 23, BLK
A31	YA000201	1	ADH THRDLKR REM .02 OZ 242
A32	770A-334	1	COLLAR, LH INNER
A33	770A-335	1	COLLAR, LH OUTER
A34	770A-340	1	COLLAR, INNER RH
A35	770A-341	1	COLLAR, OUTER RH
A36	770A-319	1	COVER, REAR, TOP, LH
A37	770A-320	1	COVER, REAR, OUTER, LH
A38	770A-322	1	COVER, REAR, TOP,RH
A39	770A-323	1	COVER, REAR, OUTER, RH
A40	625ATK015	1	KIT, CRUISER HANDLE
A41	770A-401	2	CAP, END, 1.680 OD
A42	770AT-203	1	W/ SIDE HANDLE, LH
A43	770AT-204	1	W/ SIDE HANDLE, RH
A44	770AT-306	2	GRIP, 9.50 INCHES
A45	770AT-310	1	HANDLE COVER OUTSIDE, LH
A46	770AT-311	1	HANDLE COVER INSIDE, LH
A47	770AT-312	1	HANDLE COVER OUTSIDE, RH

Ref #	Part Number	Qty	Description
A48	770AT-313	1	HANDLE COVER INSIDE, RH
A49	HC700922	2	FHSCS .375-16 X 1.500, SS
A50	HT552510	4	TAP SC NO 6-20 X .375 AB PHIL
A51	HF709000	2	NSERT 1.12 X .375-16 UNC

750A Linkage Assembly

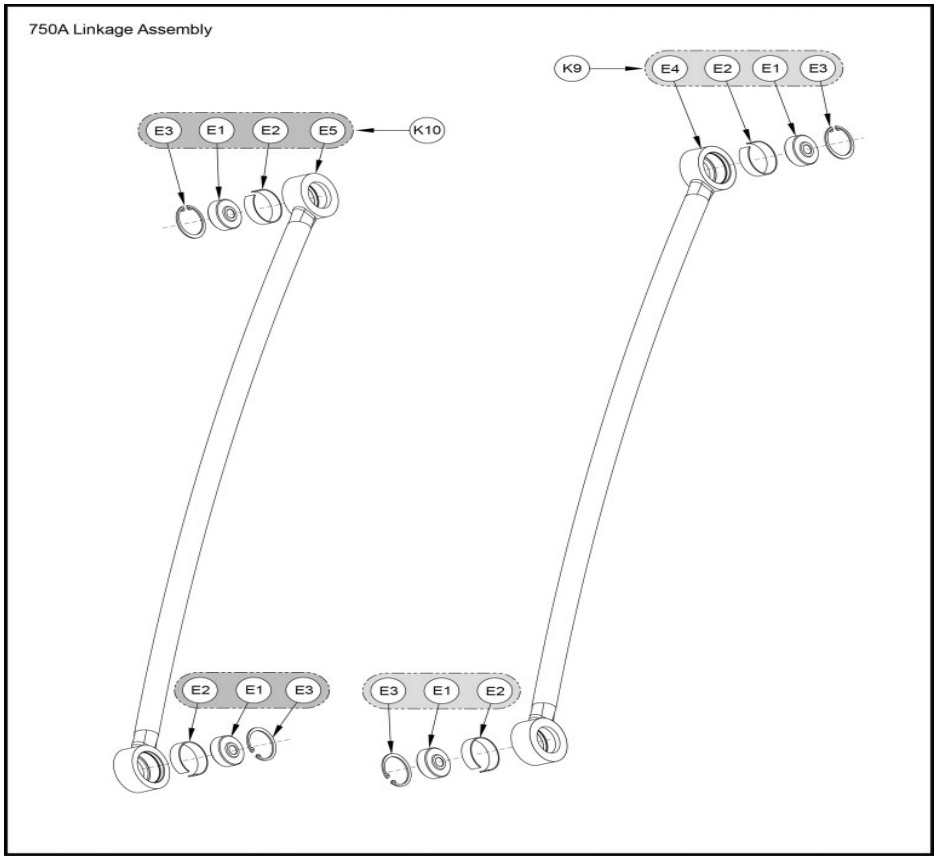

Ref #	Part Number	Qty	Description
E1	FB030244	4	BEARING,.50IDX1.688OD,RADIAL BALL,SELF ALIGN
E2	FC030004	4	TOLERANCE RING 42MM ID
E3	HX-17143	4	RING RETAINING,INT,5000-168
E4,K9	750AK006	2	KIT, LINKAGE ROD LEFT
E5,K10	750AK007	2	KIT, LINKAGE ROD RIGHT

750 Arc - You Fit

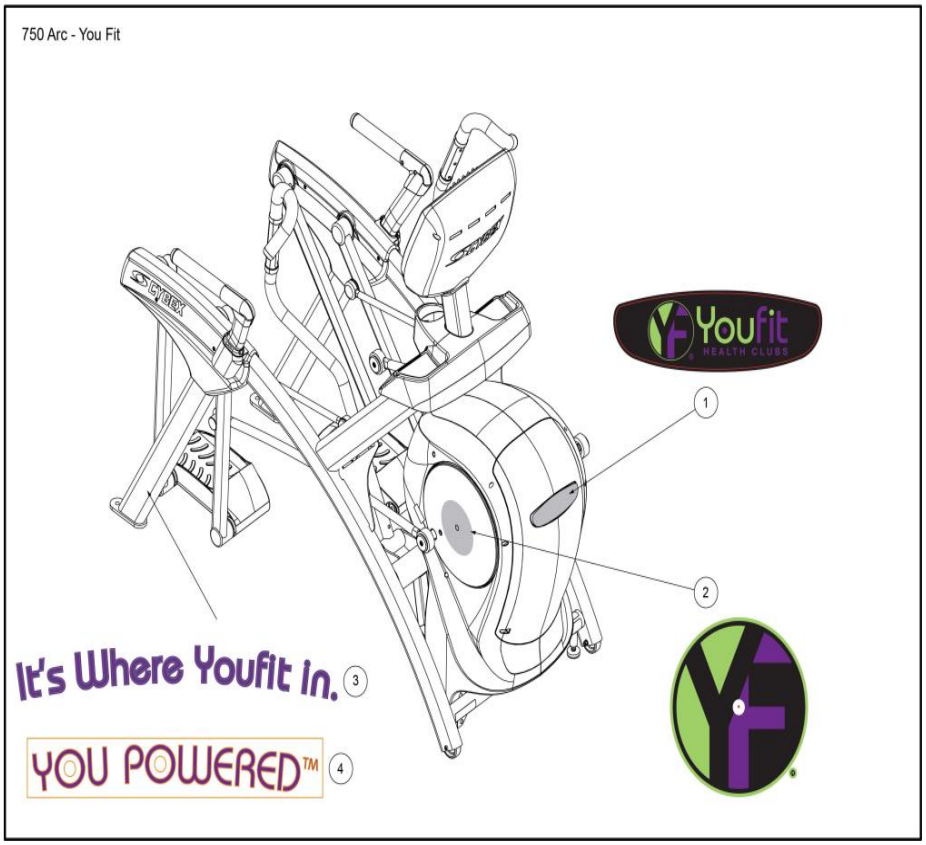

Ref #	Part Number	Qty	Description
1	DE-60297	1	DECAL, YOUFIT ARC DOME
2	DE-60281	2	DECAL, ARC YF SIDE PLATE
3	DE-60282	1	DECAL, ARC YF LEG
4	DE-60300	1	DECAL, YOU POWERED, YOUFIT

770AT Arm Linkage Assembly

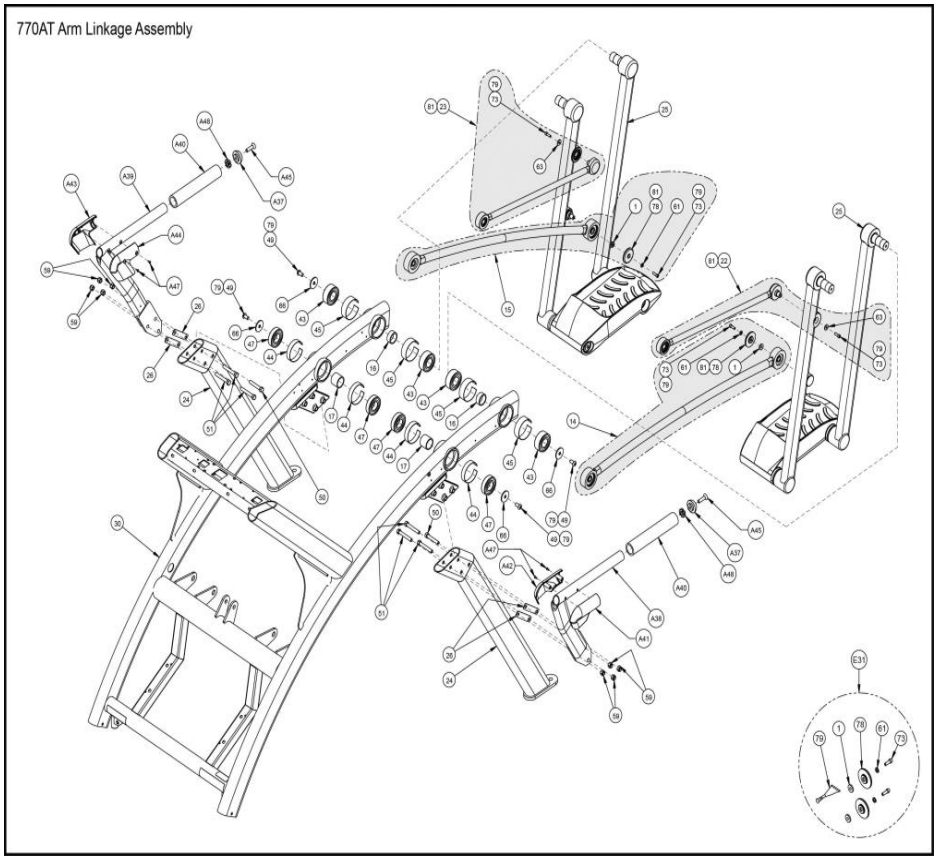

Ref #	Part Number	Qty	Description
1	600A-311	2	SPACER FLANGE
14	750AK006	1	KIT, LINKAGE ROD LEFT
15	750AK007	1	KIT, LINKAGE ROD RIGHT
16	750A-312	2	Tube Spacer
17	750A-325	3	Tube Spacer
22	750AK012	1	KIT, ARM HANDLE LINKAGE LH
23	750AK013	1	KIT, ARM HANDLE LINKAGE RH
24	770A-201	2	W/ LEG Custom
25	770AK010	2	KIT, FOOT PLATE ARM, REAR
26	771A-322	4	PLATE, SPACER
30	770AT-200	1	W/ MAIN FRAME Custom
A37	770A-401	2	CAP, END, 1.680 OD
A38	770AT-203	1	W/ SIDE HANDLE, LH
A39	770AT-204	1	W/ SIDE HANDLE, RH
A40	770AT-306	2	GRIP, 9.50 INCHES
A41	770AT-310	1	HANDLE COVER OUTSIDE, LH
A42	770AT-311	1	HANDLE COVER INSIDE, LH
43	FB030256	4	BEARING BALL 1.181 DIA DOUBLE ROW
A43	770AT-312	1	HANDLE COVER OUTSIDE, RH
44	FC030003	4	TOLERANCE RING 2.4409 ID
A44	770AT-313	1	HANDLE COVER INSIDE, RH
A45	HC700922	2	FHSCS .375-16 X 1.500, SS

Ref #	Part Number	Qty	Description
45	FC030011	4	Tolerance Ring .62mm dia
47	HB-17280	4	BEARING,BALL,SINGLE ROW,6206
A47	HT552510	4	TAP SC NO 6-20 X .375 AB PHIL
A48	HF709000	2	NSERT 1.12 X .375-16 UNC
49	HC700415	4	BHSCS .375-16 X .75
50	HC701228	2	HX HD CAP SC .375-16 X 2.25
51	HC701230	6	HX HD CAP SC .375-16 X 2.500
59	HN704901	8	LOCKNUT .375-16 NYLON
61	HS307601	2	WASH FLAT .281 .500 .062 T
63	HS307603	2	WASHER FLAT .253 ID X .750 OD X .120
66	HS347602	2	WASHER .390 X 1.500 X .124 FLAT
73	HX622815	4	SHCS .250-20 X .75 SS
78,E31	600AK012	3	KIT LINKAGE CAP

770AT E3 View - Console Tray Assembly

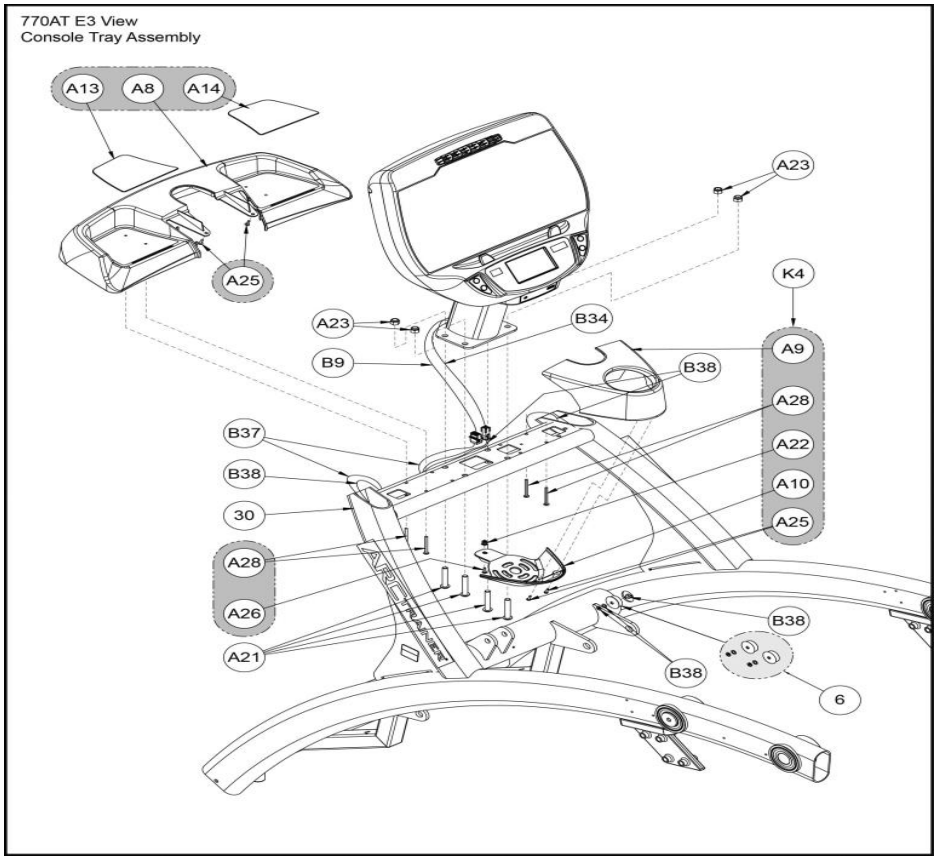

Ref #	Part Number	Qty	Description
K4	770AK030	1	Kit, Tray 770A
6	770ATK010	1	KIT, CABLE NUT-WASHER
A8	770A-316	1	TRAY ACCESSORY
A9	770A-317	1	HOLDER, CUP, TOP
B9	AW-23849	1	CABLE,525AT CONSOLE UPPER
A10	770A-318	1	HOLDER, CUP,BOTTOM
A13	770A-331-4	1	DECAL, WARNING, LOWER 770A CONSOLE, ENGLISH
A14	770A-332-4	1	DECAL, WARNING, LOWER 770A CONSOLE, ENGLISH
A21	HC700428	4	BHSCS .375-16 X 2.25
A22	HF540200	1	GROMMET NYLON
A23	HN704901	4	LOCKNUT .375-16 NYLON
A25	HT532512	1	PN HD PHIL SC #6 X .50 PLASTITE
A26	HT552512	1	TAP SC NO. 8-16 X .50 PLASTITE PAN HEAD PHILLIPS BLACK
A28	HT592526	4	Tap Sc 10-12 x 2.00 Pn Hd Phil
30	770AT-200	1	W/ MAIN FRAME Custom
B34	770AT-317	1	NLA: CABLE, 770AT, CHR JUMPER
B37	AW-20935	1	Cable Frame Harness
B38	AW-21415	2	Cable CHR Frame

770AT E3 View - Drive Frame Assembly

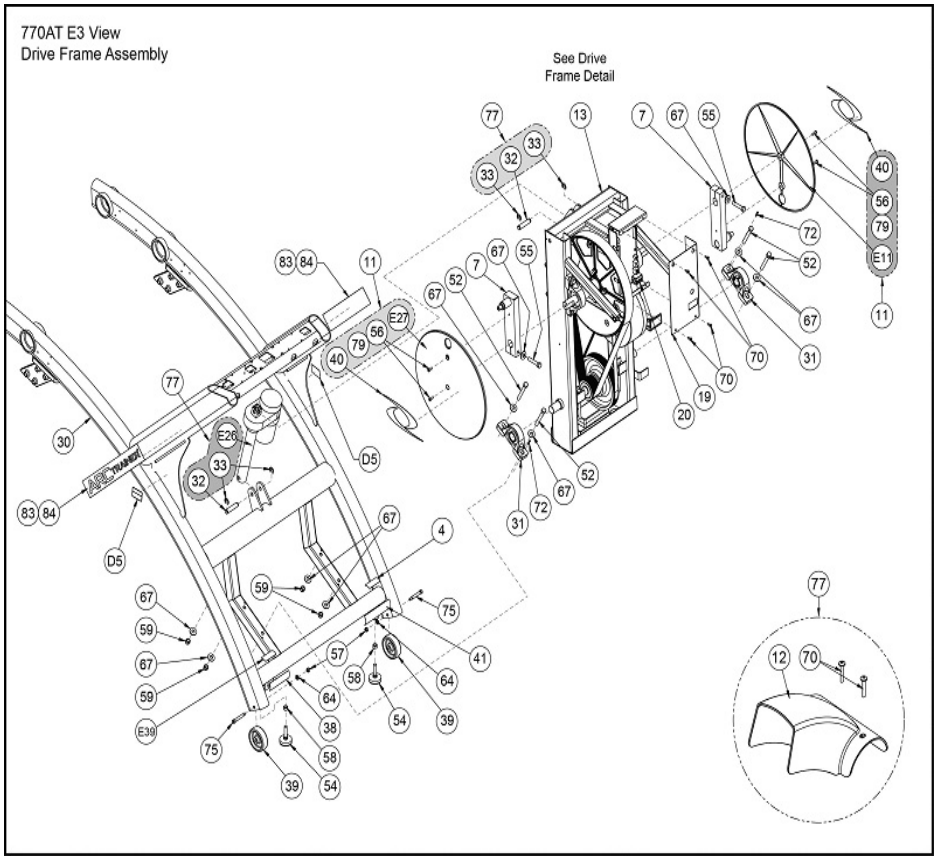

Ref #	Part Number	Qty	Description
4	600A-362	1	LABEL PATENT BIOSIG
D5	DE-17219	1	DECAL CAUTION MOVING PARTS
7	610A-395	2	ASSY ARM CRANK
11	1008223-0001	1	KIT: COVER, CRANK, FLAT
12	740A-354	1	Cover Elevation Motor
13	750A-101	1	Drive Frame Assembly
19	750A-365	1	Cover Controller
20	750A-396	1	Ferrite Clamp-on .40 ID
E27	1006629-0002	1	COVER, CRANK-CHR
30	770AT-200	1	W/ MAIN FRAME Custom
31	AF-16694	2	ASSY,BEARING,PILLOW BLOCK
32	AP030055	1	Pin Groove .50 x 2.00
33	BR030228	2	Retaining Ring .500 External
38	CM000199	1	DECAL SERIAL NUMBER
39	CW-17231	2	WHEEL, TENSIONER
E39	750A-372	1	Decal Warning
40	DE-17339	2	DECAL CYBEX VORTEX
41	DE-21625	1	Label ETL CSA CE 750A
52	HC701234	4	HX HD CAP SC .375-16 X 3.00
54	HG700022	2	LEVELING GLIDE 3-8-16
55	HH701226	2	BOLT, HHCS GRD 8, .375-16 X 2.0
56	HM582514	4	PN HD PHIL SC NO 10-32 X .625 BLK ZN

Ref #	Part Number	Qty	Description
57	HN624901	2	LOCKNUT .250-20 NYLON BLACK ZINC
58	HN704000	2	HEX NUT .375-16
59	HN704901	4	LOCKNUT .375-16 NYLON
64	HS328300	4	LOCKWASHER SPLIT .312
67	HS347700	6	WASHER USS .375
70	HT572512	6	TAP SC NO. 10 - 24 X .50 PN HD PHIL
72	HX-17023	2	PIN,SPRING .187X.75 LG,TYPE 420,ST STL
75	JD623324	2	S BOLT .312 X 1.75 .250-20
77,E26	750AK025	3	KIT, ELEVATION MOTOR
79	YA000201	2	ADH THRDLKR REM .02 OZ 242
83	770A-337	2	DECAL, ARC TRAINER BLACK
84	770A-338	2	DECAL, ARC TRAINER

770AT E3 View - Foot Plate Assembly

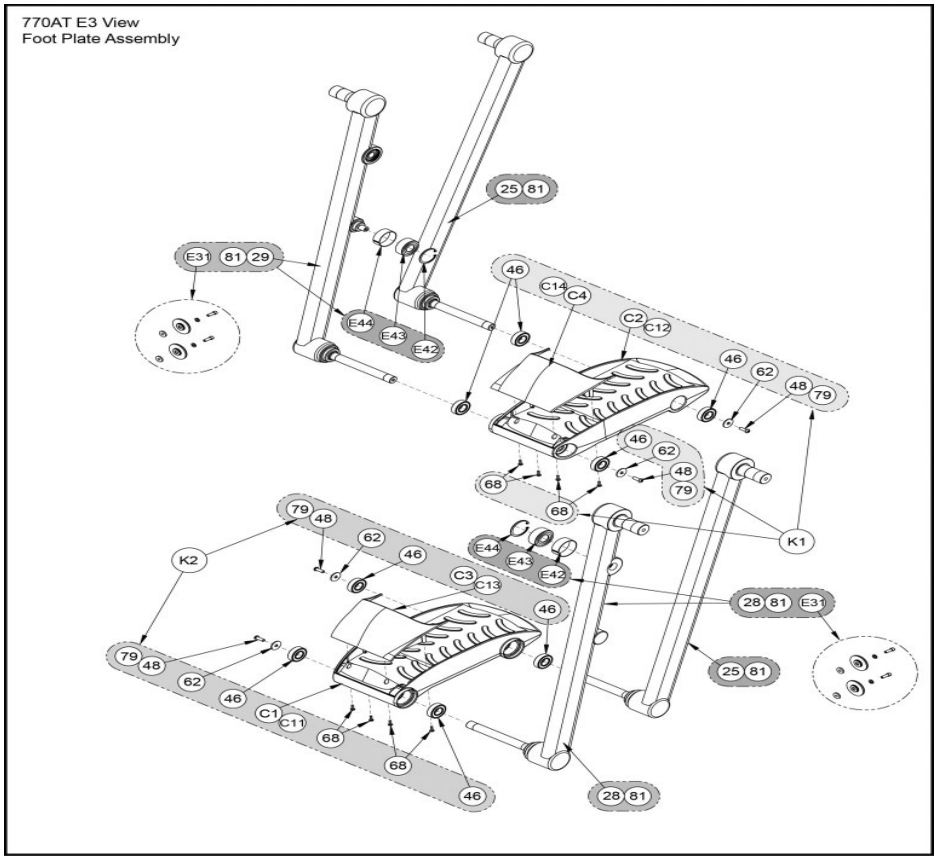

Ref #	Part Number	Qty	Description
C1	740A-378	1	Foot Plate LH
K1	750AK002	1	KIT, FOOT PLATE RIGHT
K2	750AK003	1	KIT, FOOT PLATE LEFT
C2	740A-379	1	Foot Plate RH
C3	740A-380	1	Toe Cap LH
C4	740A-381	1	Toe Cap RH
C11	740A-392	1	FOOT PLATE, LH
C12	740A-393	1	FOOT PLATE, RH
C13	740A-394	1	TOE CAP, LH
C14	740A-395	1	TOE CAP, RH
25	770AK010	2	KIT, FOOT PLATE ARM, REAR
28	773ATK009	1	KIT, FOOT PLATE ARM, FRONT LEFT SIDE
29	773ATK010	1	KIT, FOOT PLATE ARM, FRONT RIGHT SIDE
E31	600AK012	1	KIT LINKAGE CAP
E42	BR030225	2	RETAINING RING 1.438 INTERNAL
E43	FB030248	2	BEARING SPHERICAL 15MM
E44	FC030005	2	TOLERANCE RING 1.375 ID
46	HB-17036	8	BEARING,BALL, .750DIA
48	HC620415	4	BHSCS .250-20 X .75, BL ZN
62	HS307604	4	WASHER, FLAT .281 ID X 1.000 OD X .063 TH BL ZN
68	HT552512	8	TAP SC NO. 8-16 X .50 PLASTITE PAN HEAD PHILLIPS BLACK

770AT E3 View - Handle Assembly

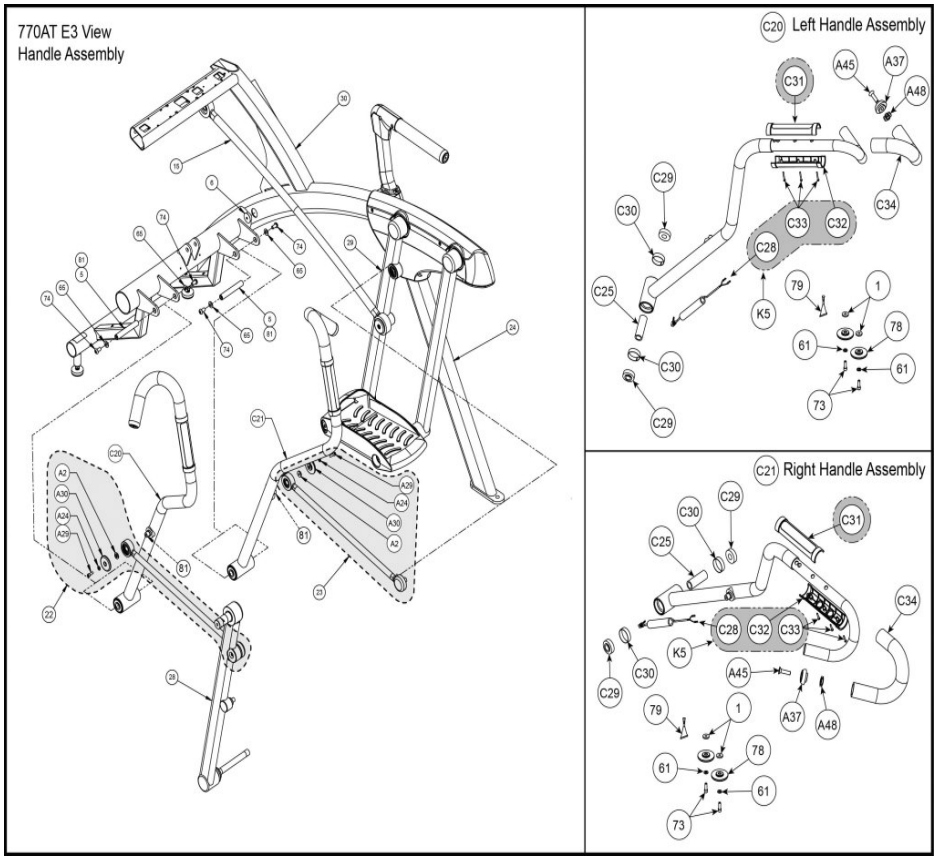

Ref #	Part Number	Qty	Description
1	600A-311	2	SPACER FLANGE
5	610A-351	2	PIN PIVOT
K5	750ATK014	1	KIT, CONTACT GRIPS WITH WIRES
6	610AK021	1	KIT PLUG INSERT
15	750AK007	1	KIT, LINKAGE ROD RIGHT
C20	770ATK006	1	KIT, ARM HANDLE, LEFT SIDE
C21	770ATK007	1	KIT, ARM HANDLE, RIGHT SIDE
22	750AK012	1	KIT, ARM HANDLE LINKAGE LH
23	750AK013	1	KIT, ARM HANDLE LINKAGE RH
24	770A-201	1	W/ LEG Custom
C25	610A-356	2	TUBE SPACER
C28	AW-18286	1	CABLE 610A CHR GRIP
28	773ATK009	1	KIT, FOOT PLATE ARM, FRONT LEFT SIDE
29	773ATK010	1	KIT, FOOT PLATE ARM, FRONT RIGHT SIDE
C29	FB030232	4	BRG RADIAL 17MM ID EXT RACE
30	770AT-200	1	W/ MAIN FRAME Custom
C30	FC030006	4	TOLERANCE RING 1.575 ID
C31	1007342-0001	2	GRIP, HEART RATE, FRONT
C32	1007343-0001	2	GRIP, HEART RATE, BACK
C33	HT532519	6	TAP SC #6-20 X 1.12, TYPE 25, PPHD
C34	750A-388	2	Grip 14.38
A37	770A-401	2	CAP, END, 1.680 OD

Ref #	Part Number	Qty	Description
A45	HC700922	2	FHSCS .375-16 X 1.500, SS
A48	HF709000	2	NSERT 1.12 X .375-16 UNC
61	HS307601	2	WASH FLAT .281 .500 .062 T
65	HS347600	2	WASHER SAE .375
74	HX700415	2	BHSCS .375-16 X .75 SS
78	600AK012	4	KIT LINKAGE CAP
79	YA000008	2	ADH THRDLKR REM NO. 242

770AT E3 View - Lower Electronics

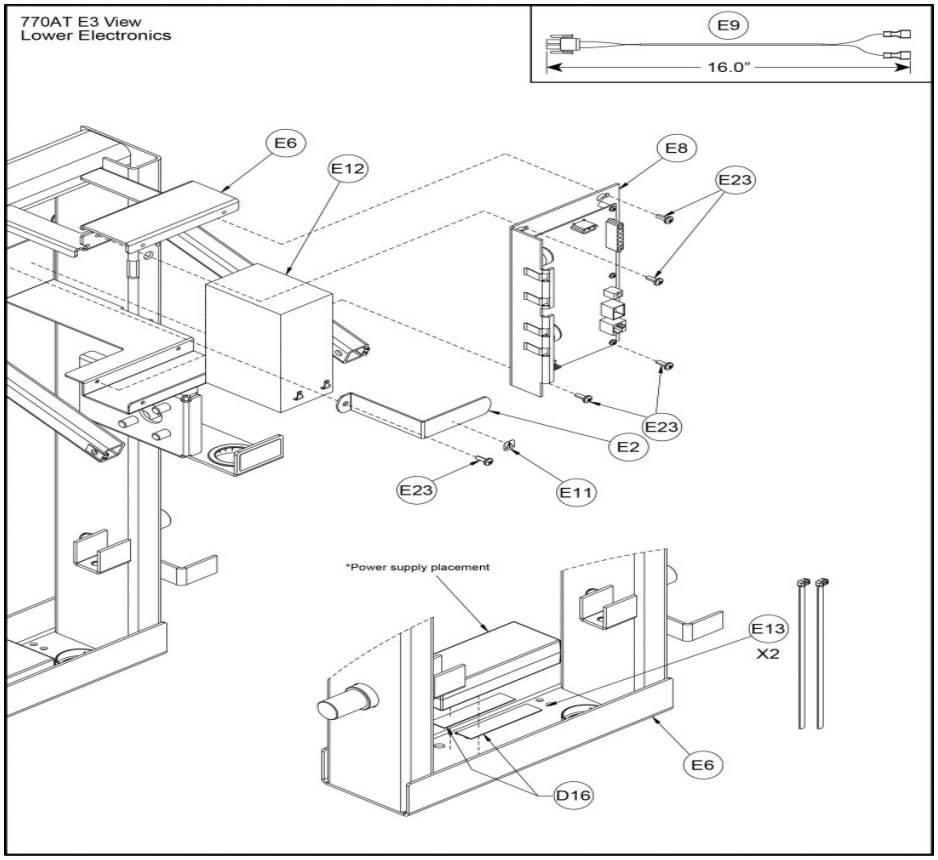

Ref #	Part Number	Qty	Description
E2	630A-314	1	CLAMP BATTERY
E6	750A-212	1	W Frame
E8	AD-23681	1	PCA,770A 625A,LOWER CONTROLLER
E9	AW-18447	1	CABLE SPA BATTERY
E11	DE-19586	1	LABEL WARNING ICON
E12	EC-18267	1	BATTERY 12V 7AHR
E13	EW000028	2	CABLE TIE 8.00
D16	01250	1	TAPE DOUBLE COATED 0.75
E23	HT572512	5	TAP SC NO. 10 - 24 X .50 PN HD PHIL

770AT E3 View - Rear Cover Assembly

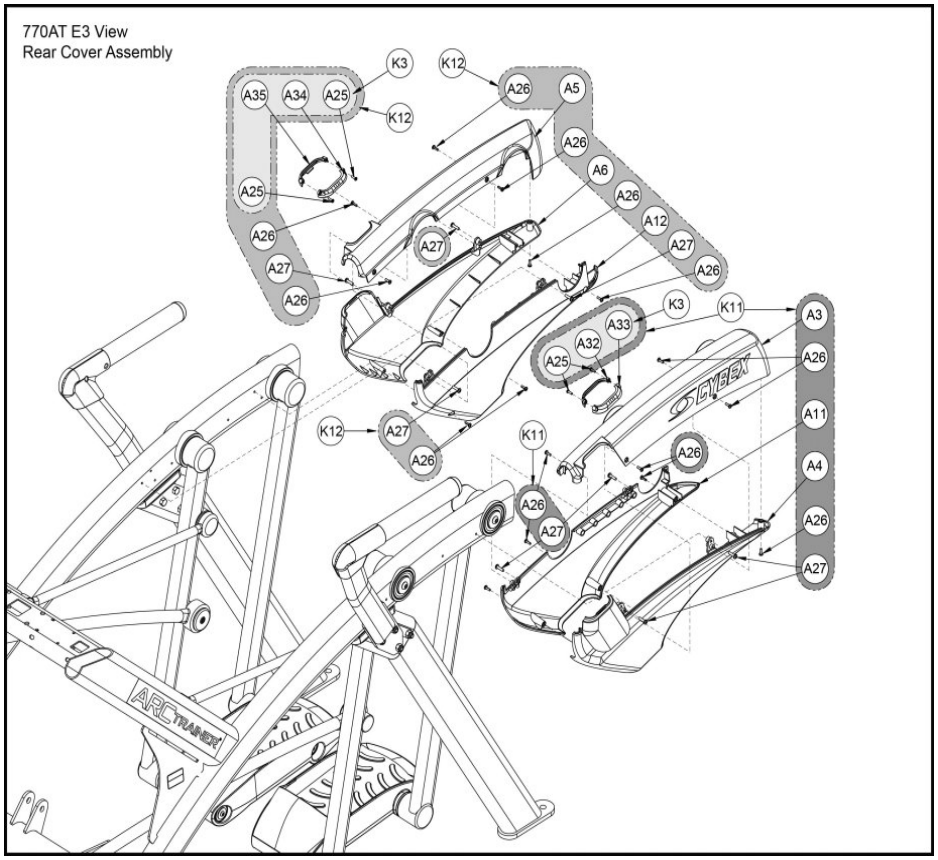
770AT E3 View
Rear Cover Assembly
K3
K12
A35
A34
A25
A26
A5
A6
A12
A27
A33
A32
K11
A3
A4
A11
A26
A27
A25
K12
K11
A26
A27
A26
A26
A27
A26
A26
A27
A26
A26
A26
A27
A26
A26
A27
A26
A26
A27

770AT E3 View - Shroud Assembly

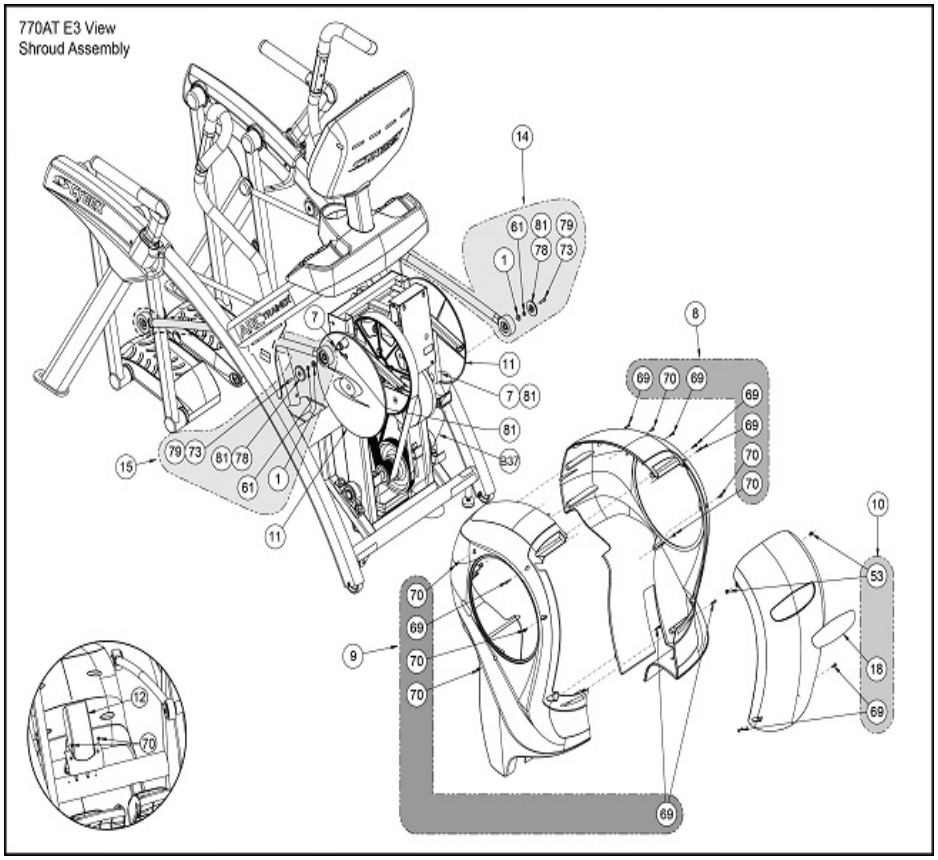

Ref #	Part Number	Qty	Description
1	600A-311	2	SPACER FLANGE
7	610A-395	1	ASSY ARM CRANK
8	750AK021	1	KIT, ARC SHROUD LEFT
9	750AK022	1	KIT, ARC SHROUD RIGHT
10	750AK024-4	1	KIT, ACCESS COVER
11	1008223-0001	2	KIT: COVER, CRANK, FLAT
12	740A-354	1	Cover Elevation Motor
14	750AK006	1	KIT, LINKAGE ROD LEFT
15	750AK007	1	KIT, LINKAGE ROD RIGHT
18	750A-349	1	Decal ARC
53	HF540200	2	GROMMET NYLON
61	HS307601	2	WASH FLAT .281 .500 .062 T
69	HT552515	9	TAP SC NO. 8-16 X .75 PLASTITE PN HD PHIL BLK
70	HT572512	6	TAP SC NO. 10 - 24 X .50 PN HD PHIL
73	HX622815	2	SHCS .250-20 X .75 SS

770AT, 771AT - Hardware Manual and Power Cords

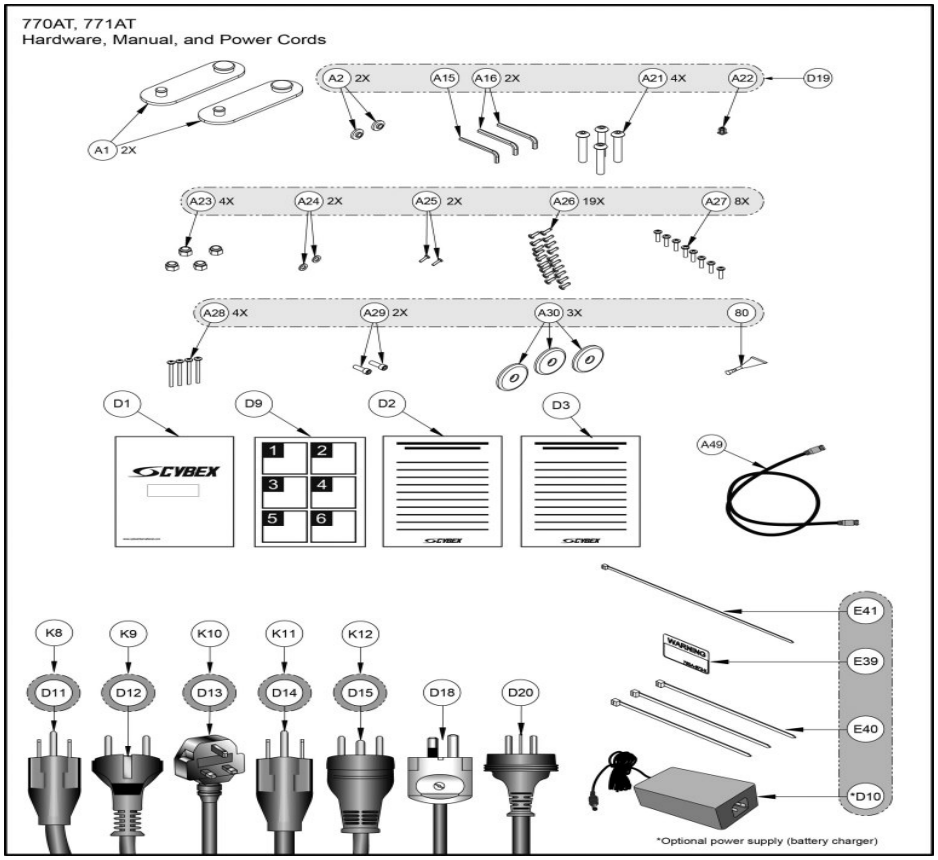

Ref #	Part Number	Qty	Description
A1	12090-322	2	PAD FOOT
D1	5625	1	MANUAL M ASSEMBLY
A2	600A-311	2	SPACER FLANGE
D2	625A-330	1	WARRANTY SHT COMMERCIAL ARC 625
D3	625A-331	1	WARRANTY SHT CONSUMER ARC 625
K9	750AK033	1	KIT VOLTAGE ASSY 220V/50HZ EUROPE NON UK
D9	625A-328	1	POSTER, ASSY INSTR.
D10,K8	TR-22382	2	Power supply
K10	750AK034	1	Kit Voltage Assy 220V/10A UK
D11	EW600007	1	POWER CORD, NEMA5-1 5PTOIEC320 C13 LA, 10A
K11	750AK035	1	KIT VOLTAGE ASSY 110V/50HZ JAPAN
K12	750AK036	1	KIT, VOLTAGE ASSEMBLY 10A/250V DANISH
D12	EW600008	1	POWER CORD, CEE 7/7 TO IEC320 C13 LA, 10A
D13	EW600009	1	POWER CORD, BS 1363UK10 TO IEC320 C13 LA, 10A
D14	EW600010	1	POWER CORD, JIS 8303 TO IEC320 C13 LA, 12A
D15	EW600011	1	POWER CORD, DANISH DK2-1A TO IEC320 C13 LA, 12A
A15	BK030201	1	HEX KEY .188IN
A16	BK030204	2	HEX KEY .219IN
D18	EW600012	1	POWER CORD, AS/NZS3112TOIEC320C13 LA, 10A
D19	626AT-340	1	HARDWARE PACK, 626AT

Ref #	Part Number	Qty	Description
D20	OAW-25706	1	POWER CORD, 10A/250V, 2.5MM CHINESE TO C13
A21	HC700428	4	BHSCS .375-16 X 2.25
A22	HF540200	1	GROMMET NYLON
A23	HN704901	4	LOCKNUT .375-16 NYLON
A24	HS307601	2	WASH FLAT .281 .500 .062 T
A25	HT532512	2	PN HD PHIL SC #6 X .50 PLASTITE
A26	HT552512	19	TAP SC NO. 8-16 X .50 PLASTITE PAN HEAD PHILLIPS BLACK
A27	HT572515	8	SCREW, PAN HEAD PHILIPS 10-24 X .75 TYPE 23, BLK
A28	HT592526	4	Tap Sc 10-12 x 2.00 Pn Hd Phil
A29	HX622815	2	SHCS .250-20 X .75 SS
A30	600AK012	3	KIT LINKAGE CAP
E39	750A-372	1	Decal Warning
E40	EW000028	1	CABLE TIE 8.00
E41	EW000029	1	CABLE TIE 15.00
A49	770A-427	1	CABLE, 6', RG59 COAX F-TYPE M-M
80	YA000201	1	ADH THRDLKR REM .02 OZ 242

770AT/771AT E3 View - Console Assembly (Before J1102)

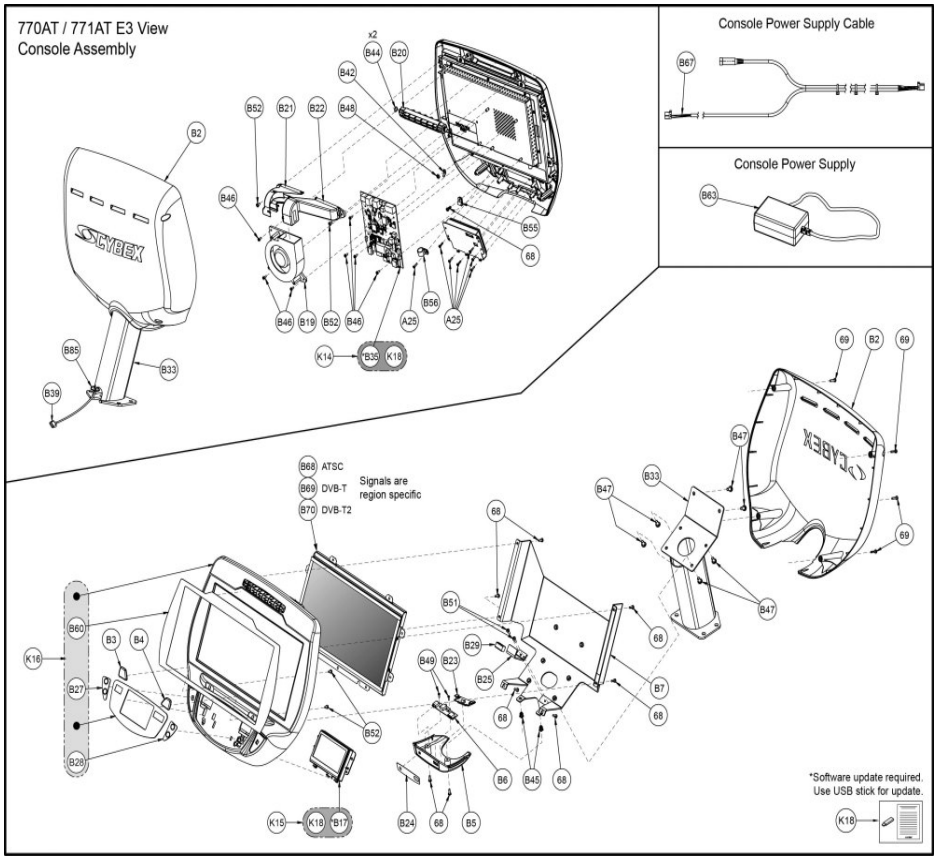

Ref #	Part Number	Qty	Description
B2	770A-326	1	CONSOLE BACK, 625A-770A
B3	770A-328	1	BACK TAB, SMALL CONSOLE, LEFT
B4	770A-329	1	BACK TAB, SMALL CONSOLE, RIGHT
B5	770A-330	1	COVER, HEADPHONE JACK DOOR, SMALL CONSOLE
B6	770A-347	1	PCA, HANDSET AUDIO JACK
B7	770A-353	1	CONSOLE MOUNTING PLATE, 770, 625
K14	K525AT-407	1	KIT, PCA MCC, 525 ARC
K16	K770A-406	1	KIT, BEZEL, W KEYPAD DECAL, EPEM 77X
B17,K15	KOCP-25536	2	KIT, DISPLAY, 4.3 LCD OPEN FRAME
K18	CP-23199	1	USB 2.0 FLASH DRIVE,BLANK for kit PKCP-23201
B19	770A-373	1	FAN, 12VDC, 120X120MM, SIDE OUTLET
B20	770A-374	1	FAN LOUVER
B21	770A-375	1	FAN DUCT, LEFT
B22	770A-376	1	FAN DUCT, RIGHT
B23	770A-379	1	SENSOR, HEART RATE COMBO
B24	770A-380	1	DECAL,HEADPHONE JACK USB
A25	HT532512	7	PN HD PHIL SC #6 X .50 PLASTITE
B25	770A-383	1	BRKT, GROUNDING, GUI
B27	770A-386	1	THUMB SWITCH, LEFT, INCLINE
B28	770A-387	1	THUMB SWITCH, RIGHT, RESISTANCE

Ref #	Part Number	Qty	Description
B29	770A-395	1	GASKET, EMI, .50 X .50 X 1.0
B33	770AT-205	1	W CONSOLE
B35	525AT-407	1	PCA, MCC, UNPROGRAMMED, IPOD, 525AT, C, R
B39	AW-23375	1	CABLE,770A IPOD 30PIN,STOCKABLE
B42	ES000004	1	TAB, FASTON 250 SERIES
B44	FO100011	2	O-RING, 334 ID X .474 OD
B45	HF540200	2	GROMMET NYLON
B46	HJ532510	7	SCREW, SEMS, 6-32 X .38 PNHD PHIL EXT BLK ZN
B47	HJ622512	6	SCREW, SEMS, .25-20 X .50 PNHD PHIL EXT BLK ZN
B48	HN546300	1	NUT, K NUT 8-32 UNC ZN
B49	HT042510	2	PN HD PHIL SC #4 X .375 PLASTITE
B51	HT542512	2	PAN HD PHIL HD SELF TAPPING, 8-32 X .50 TYPE 23
B52	HT552509	4	TAP SC NO 8-16 X .31 PLASTITE PN HD PHIL
B55	PN000001	1	CLAMP, CABLE .18 DIAMETER STANDARD
B56	PN140001	1	CLAMP, CABLE .56 DIAMETER
B60	770A-385	1	DECAL, UPPER DISPLAY, PEM, ARC
B63	TR-25809	1	Power Supply
B67	AW-23339	1	CABLE,770A CONSOLE LOWER,POWER
68	HT552512	8	TAP SC NO. 8-16 X .50 PLASTITE PAN HEAD PHILLIPS BLACK
B68	PKRA-22564	1	NC KIT,E3 REFURBISHED ATSC (use PKCP-22564)
B68	PKCP-22564	1	R&R NC KIT,e3 Replacement ATSC
B69	PKRA-22565	1	NC KIT,E3 REFURBISHED DVBT
B69	PKCP-22565	1	KIT,e3 Replacement DVBT
69	HT552515	8	TAP SC NO. 8-16 X .75 PLASTITE PN HD PHIL BLK
B70	CP-25454	1	PEM,OPEN FRAME,DVBT2
B70	PKCP-25810	1	KIT,E3 Replacement DVBT2
B85	EW000028	1	CABLE TIE 8.00

770AT/771AT E3 View - Console Cables (Before J1102)

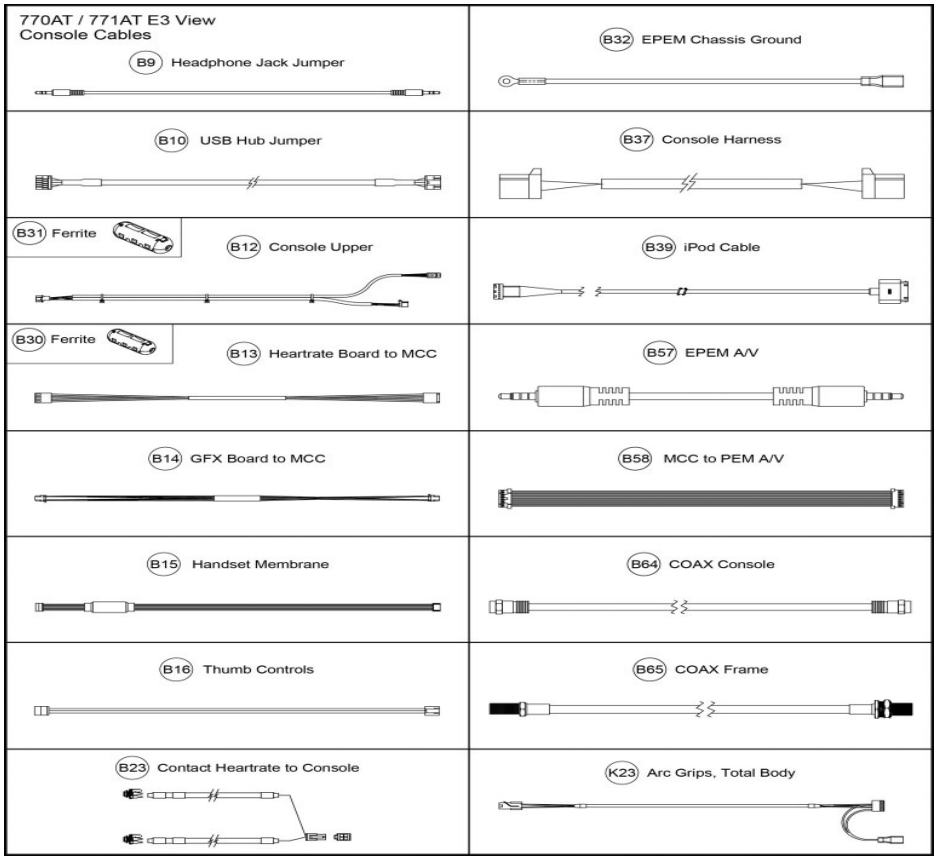

Ref #	Part Number	Qty	Description
B9	770A-357	1	CABLE, HEADPHONE JACK JUMPER, ARC
B10	770A-358	1	CABLE, USB JUMPER
B12	AW-23849	1	CABLE,525AT CONSOLE UPPER
B13	770A-361	1	CABLE, ARC HRBOARD TO MCC
B14	770A-363	1	CABLE, 770T 670 GFX BOARD TO MCC
B15	770A-364	1	CABLE, HANDSET MEMBRANE, ARC
B16	770A-365	1	CABLE,THUMB CONTROLS
K23	KAW-23550	1	KIT, ARC GRIPS TTL BODY
B23	AW-21415	1	Cable CHR Frame
B30	770A-409	1	FERRITE, 277 OHMS
B31	770A-410	1	FERRITE, 407 OHMS
B32	770A-412	1	CABLE, EPEM CHASSIS GROUND
B37	AW-20935	1	Cable Frame Harness
B39	AW-23375	1	CABLE,770A IPOD 30PIN,STOCKABLE
B57	770A-355	1	CABLE, 770ACR, TO PEM AV
B58	770A-356	1	CABLE, 770ACR, MMC TO PEM AV
B64	AW-23827	1	CABLE,2' COAX 3GHZ F-TYPE M-M JUMPER
B65	AW-23828	1	CABLE,770A,RG59 COAX,X FRAME

770 Arc Drive Frame Detail

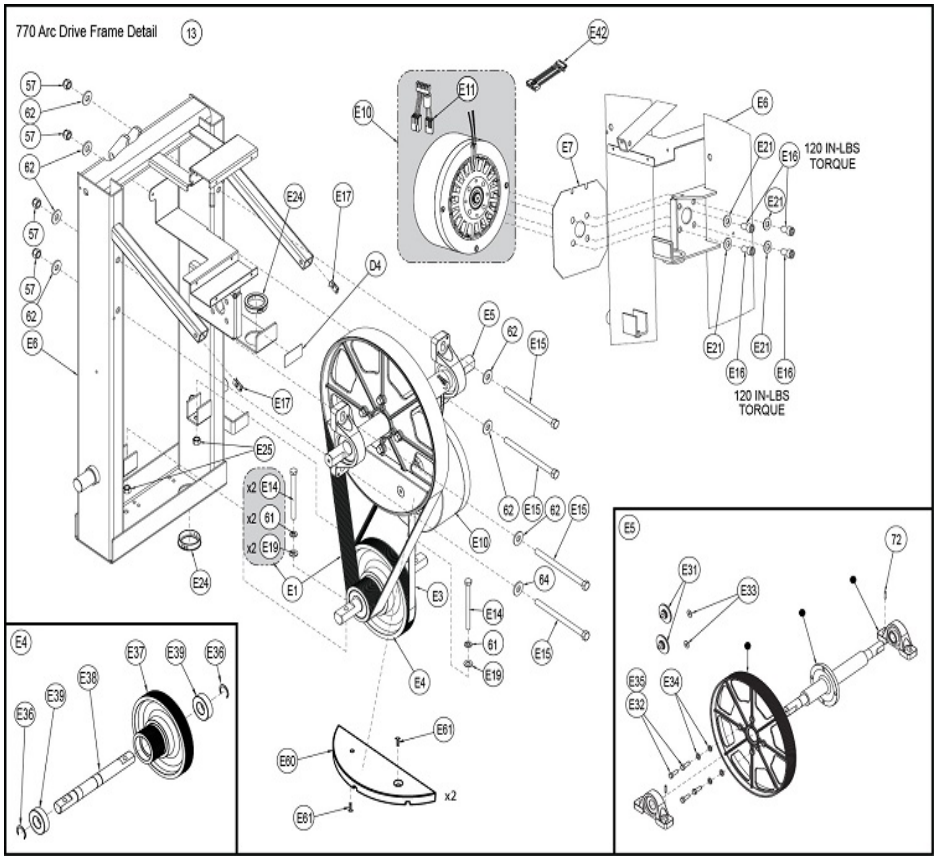

Ref #	Part Number	Qty	Description
E1	600AK020	1	KIT 16 RIB BELT TENSIONING
E3	630A-328	1	BELT SECONDARY DRIVE 7 RIB
E4	750A-110	1	Pulley Assembly Double
D4	DE-17155	1	LABEL,WARNING HOT FLYWHEEL
E5	600AK002	1	KIT PULLEY CRANK SHAFT
E6	750A-212	1	W Frame
E7	750A-364	1	Spacer Gen Winding
E10	1007425-0001	1	KIT: BRAKE, ARC TRAINER
E11	1006756-0001	2	CONNECTOR, CABLE
13	750A-101	1	Drive Frame Assembly
E14	HC661240	4	HX HD CAP SC .312-18 X 3.75
E15	HC701254	4	HX HD CAP SC .375-16 X 5.50
E16	HC702815	2	SHCS .375-16 X .750
E17	HF579000	2	PANEL FASTENER 10-24 U TYPE
E19	HS327600	4	WASHER SAE .312
E21	HS347600	2	WASHER SAE .375
E24	HX-17050	2	BUSHING,1.275IDX1.87 OD,NYLON INSULATED
E25	HN664000	2	HEX NUT .312-18
E31	600AK012	4	KIT LINKAGE CAP
E32	HC661217	2	HX HD CAP SC .312-18 X 1.000
E33	HS307600	4	WASHER SAE .250
E34	HS760100	2	WASH FLAT .380 .625 .090 T

Ref #	Part Number	Qty	Description
E35	YA000023	1	LOCTITE PERM 262 PN 26231
E36	BR030221	1	RING RETAINING EXT CRESCENT
E37	600AK014	2	KIT LOWER PULLEY ASSY
E38	FM-16859	1	SHAFT,LOWER
E39	FB030243	1	BEARING 25MMIDX52MMOD 6205
E42	OAW-24272	1	CABLE, 625/770A , BRAKE JUMPER
57	HN704901	4	LOCKNUT .375-16 NYLON
E60	FM-19507	1	COUNTERWEIGHT
61	HS328300	2	LOCKWASHER SPLIT .312
E61	JC700922	4	FHSCS .375-16 X 1.50
62	HS347700	8	WASHER USS .375
72	HX-17023	2	PIN,SPRING .187X.75 LG,TYPE 420,ST STL